Axor Uno Widespread Lav Set
38033XX1

Available in Chrome (00), Brushed Nickel (82)

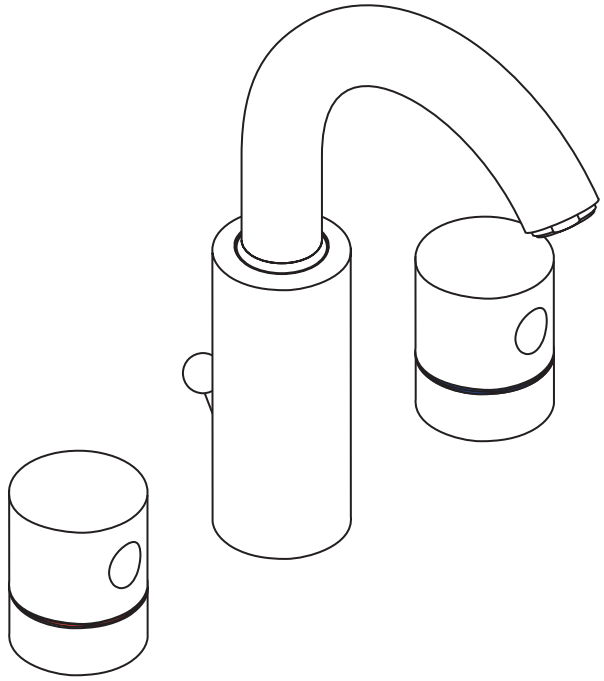

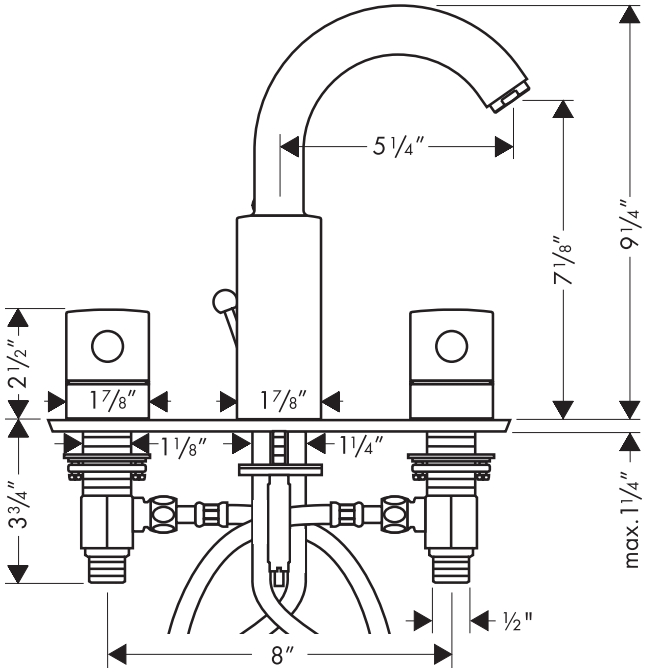

Product Specification

90° ceramic cartridges
Includes pop-up assembly
Spout arm swivels 150°
Hole sizes in mounting surface:
valves 1 1/4″
spout 1 3/8″
Max. mounting surface thickness 1 1/4″
Flow rate 2.2 gpm
Requires 1/2″ supply lines (not included)

hansgrohe