Axor Phoenix Widespread Lav Set – High Spout
17115XX1

Available in Chrome (00), Oil Rub Bronze (62), Brushed Nickel (82)

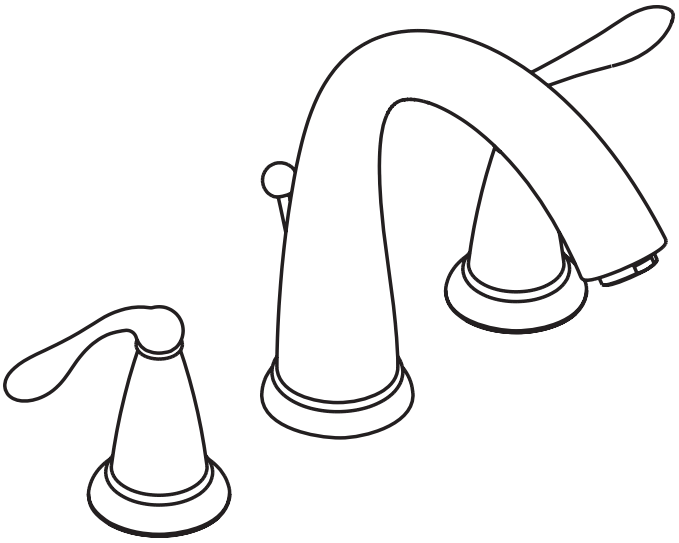

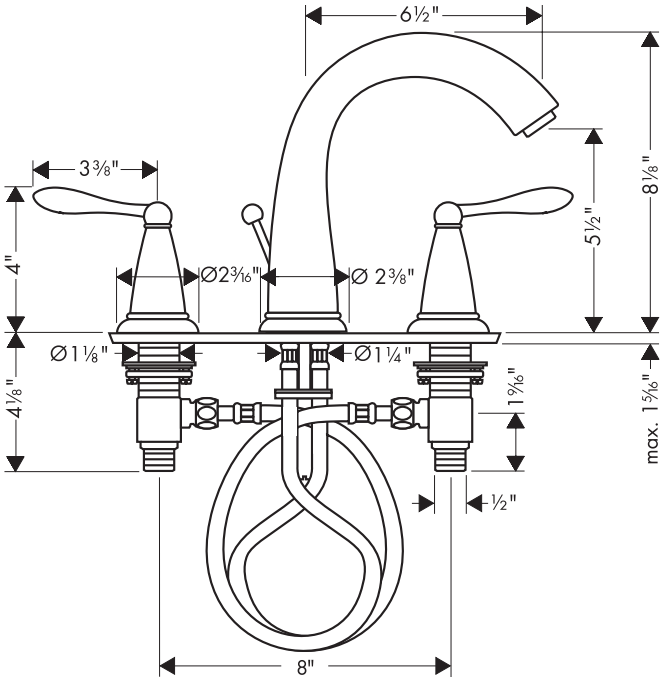

Product Specification

Lever handles
Solid brass
90° ceramic cartridges
Includes pop-up assembly
Hole sizes in mounting surface
valves 1 1/4″
spout 1 3/8″
Max. mounting surface thickness 1 5/16″
Requires 1/2″ supply lines (not included)

hansgrohe

US - Specification Sheet • Revised 02/2007